GORINI
made in italy

CONCHIGLIA
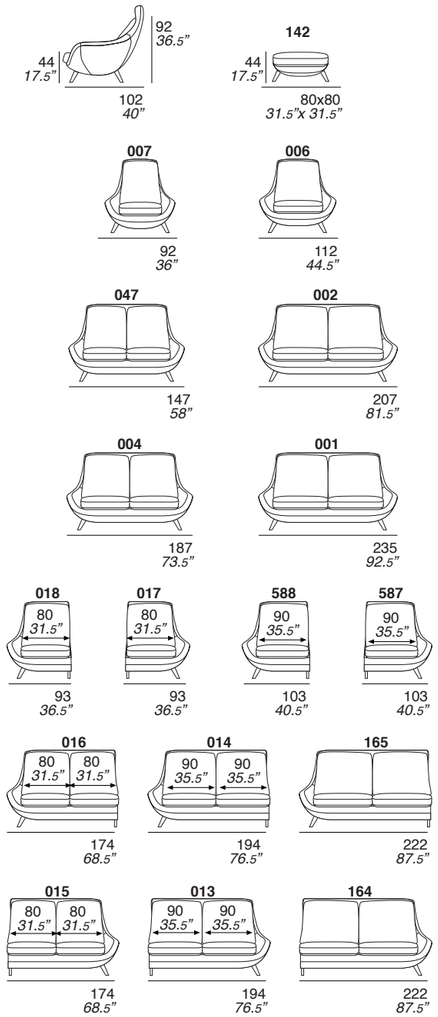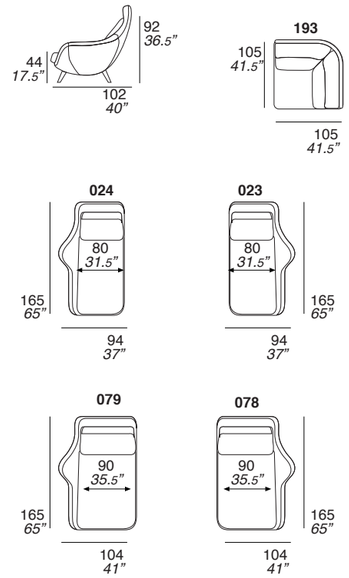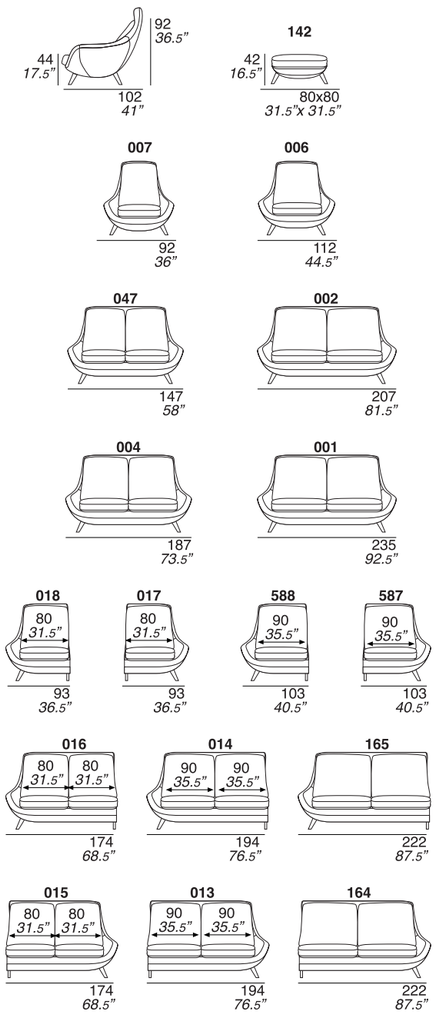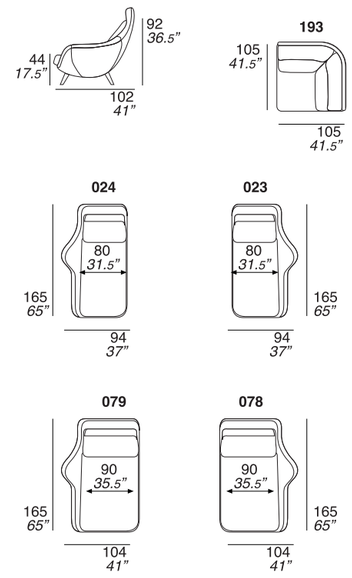
TECHNICAL SHEET